# CAROLINA TWIST

Although outside the scope of ASME PTC 19.3TW, straked thermowells like the Carolina Twist can yield longer immersion lengths in clean, non-erosive or corrosive high velocity flow.

| #1 | DESCRIPTION |
|---|---|
| 5U | Carolina Twist Thermowell --Add a W here for a brass plug and stainless steel chain attached to the thermowell (Ex: 5UW) |

| #2 | STEM SIZE | | |
|---|---|---|---|
| C | Compact | Root (Q) OD: 0.787" (20mm) | Tip (B) OD: 0.630" (16mm) |
| L | Large | Root (Q) OD: 0.984" (25mm} | Tip (B) OD: 0.748" (19mm) |

| #3 | BORE SIZE & INSTRUMENT CONNECTION (IC) STYLE -- Standard is NPSF -- Add N suffix for NPTF | | |
|---|---|---|---|
| 2 | 0.260" ID used for 1/4" OD sensors (Std) | 3 | 0.385" ID used for 3/8" OD sensors |
| X | Other, specify | | |

Note: Add N suffix for NPTF - std for open tip options. (Example: 2N = 0.260" ID with 1/2" NPTF IC)

| #4 | STRAKE LENGTH |
|---|---|
| S__" | Length in inches |

| #5 | U (INSERTION) LENGTH [15] |
|---|---|
| U__" | Length in Inches |

| #6 | H (HEAD) LENGTH -- Minimum of 2.25" [15] |
|---|---|
| H__" | Length in Inches |

| #7 | STEM MATERIAL [31-34] | | |
|---|---|---|---|
| A | Alloy 800H/HT | M | Inconel 600 |
| G | Carbon Steel A105 | N | Monel 400 |
| H | 304 Stainless Steel | P | Hastelloy B-3 |
| I | 304 Low Carbon Stainless Steel | Q | Hastelloy C-276 |
| J | 310 Stainless Steel | S | Titanium |
| K | 316 Stainless Steel | X | Other, specify |
| L | 316 Low Carbon Stainless Steel | | |

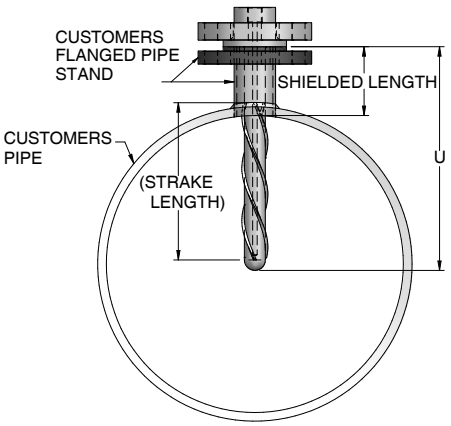


| #8 | WELD & NPS SIZE OF FLANGE [27] | | |
|---|---|---|---|
| 3 | 1" | 6 | 3" |
| 4 | 1-1/2" | X | Other, specify |
| 5 | 2" | | |

Note: Add F prefix to section to specify a Full Penetration Weld is required. (Example: F4 = 1-1/2" flange Full Penetration Weld)

| #9 | FLANGE PRESSURE RATING per ASME B-16.5 | | |
|---|---|---|---|
| A | 150 | E | 900 |
| B | 300 | F | 1500 |
| C | 400 | G | 2500 |
| D | 600 | X | Other, specify |

| #10 | FACING | | |
|---|---|---|---|
| 1 | Raised (Standard) | 4 | Van Stone no Lap Flange |
| 2 | Flat | 5 | Van Stone with Lap Flange |
| 3 | Ring Joint Type | X | Other, specify |

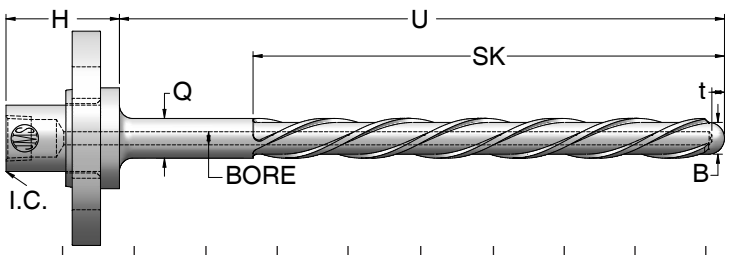


| #11 | FLANGE MATERIAL [31-34] | | |
|---|---|---|---|
| A | Alloy 800H/HT | M | Inconel 600 |
| G | Carbon Steel A105 | N | Monel 400 |
| H | 304 SS | P | Hastelloy B-3 |
| I | 304L SS | Q | Hastelloy C-276 |
| J | 310 SSI | S | Titanium |
| K | 316 SS | X | Other, specify |
| L | 316L SS | | |

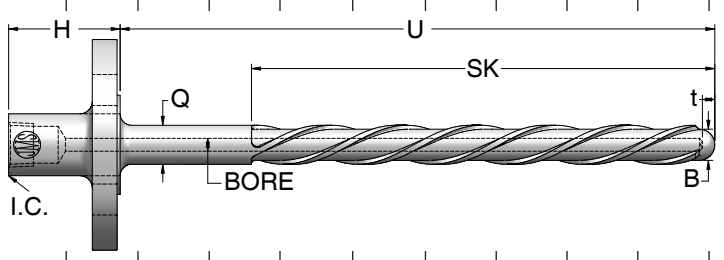


| #12 | OPTIONS |
|---|---|
| 1 | Tag # stamped on well |
| M | MTR |
| C* | Strength Calculation -- requires additional info |
| F | Flat open tip |
| V | Angled open tip (state degrees if not 45°) |
| 4 | 1/4" NPTF Instrument Connection |
| X | Other, specify |

| 5U | C | 2 | S9 | U12 | H2.25 | K | 4 | B | 1 | K | 1 |
|---|---|---|---|---|---|---|---|---|---|---|---|